590TP Series
Electronic Faucet with Surface Mount Control Box

TECK® COMMERCIAL

DELTA

SPECIFICATION: (EXAMPLE)

- Supplied as complete product
- **Proximity® Sensing Technology**
- Chrome-plated **CAST** hi-rise spout
- **Battery** (4 'C' cell) or **Hardwire** (24 VAC) deckmount electronic handwash system
- Adjustable sensing range and timeout
- Surface mount housing
- Mixing valve required (order separately)
- Serviceable filter screen upstream of the valve

and... with... (specify battery or hardwire)
with... (add outlet required)
with... (4" or 8" coverplates – specify separately – see next page)
with... (for hardwire with battery backup – specify separately – see next page)
with... (transformer required for hardwire models – specify separately – see next page)

590TP0120



Engineer/Architect Approval

Model Specified:

Approval: Date:

MODEL NUMBER EXAMPLE:
Configurations vary, see below for availability.

590TP0120TR

Power Supply
0 = Hardwire operated
1 = Battery operated

Spout
1 = Single hole deckmount hi-rise

Outlet
2 = Vandal resistant laminar outlet
5 = Vandal resistant laminar outlet
9 = Vandal resistant spray outlet

Control Box
0 = Surface mount box (Available as complete model ONLY)
8 = Trim ONLY for recessed box (Must order rough-in number separately AND trim for complete product) See **DSP-590TPCB8**

TR ONLY used for recessed box (not required for surface box)

AVAILABLE MODELS

OUTLET	SURFACE MOUNT CONTROL BOX	
	HARDWIRE	**BATTERY OPERATED**
	1 Deckmount Hi-Rise Spout	**1** Deckmount Hi-Rise Spout
2 Vandal Resistant Laminar Outlet 1.5 gpm (5.7 L/min)	590TP0120	590TP1120
5 Vandal Resistant Laminar Outlet 0.5 gpm (1.9 L/min)	590TP0150	590TP1150
9 Vandal Resistant Spray Outlet 0.35 gpm (1.32 L/min)	590TP0190	

Refer to www.specselect.com for individual models.
Batteries included on all battery models.

Flow Rates are at 60 PSI.
Note: Use all pages as product submittal sheets.

Delta reserves the right (1) to make changes in specifications and materials, and (2) to change or discontinue models, both without notice or obligation.
Dimensions are for reference only. See current full-line price book or www.specselect.com for finish options and product availability.

590TP Series
Electronic Faucet with Surface Mount Control Box

TECK® COMMERCIAL

DELTA

APPROVALS:

- CSA certified
- Complies to ASME A112.18.1/CSA B125.1
- Indicates compliance to ICC/ANSI A117.1
- Outlet option 2 is EPA WaterSense listed
- Verified compliant with 0.25% weighted average Pb content regulations

(Contact Delta Representative for State and/or Local Approvals.)

Patented

FLOW RATE VS PRESSURE

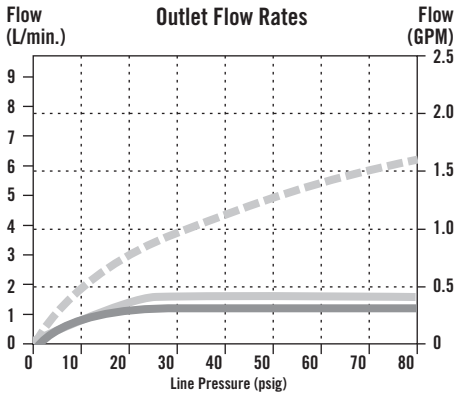

Spout Outlets

No. 2 Laminar Flow Outlet
No. 5 Flow Control Outlet
No. 9 Outlet

590TP SERIES

FRONT VIEW

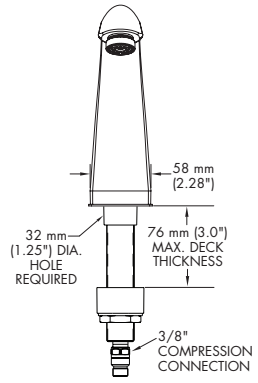

SIDE VIEW

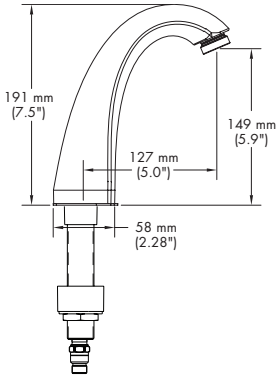



4" AND 8" COVERPLATE (ORDER SEPARATELY)

FRONT VIEW

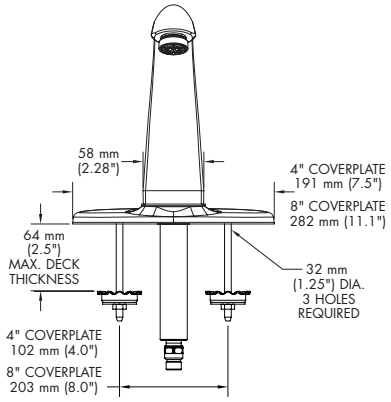

SIDE VIEW

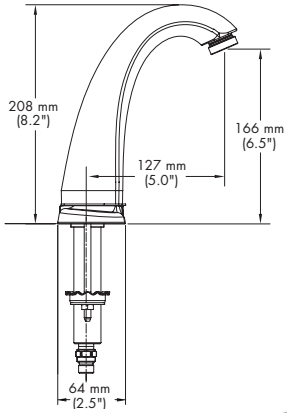





TYPICAL INSTALLATION

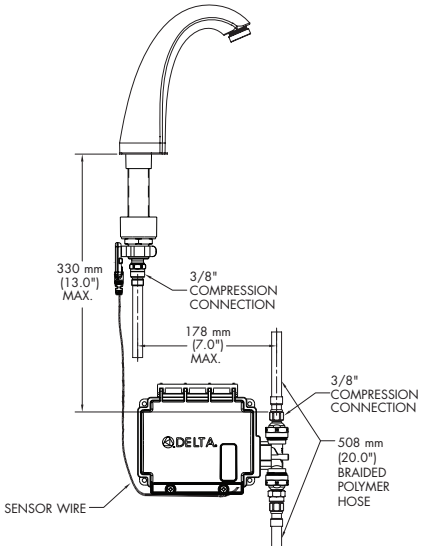

OPTIONAL COVERPLATES	
PRODUCT NO.	**DESCRIPTION**
061159A	4" Coverplate
061160A	8" Coverplate
Available optional coverplates for field conversion. Includes anti-rotation pin for secure public lavatory installation.	

Note: Measurements may vary ± 6mm (0.25")

Refer to www.specselect.com for individual models.

Flow Rates are at 60 PSI.
Note: Use all pages as product submittal sheets.

Delta reserves the right (1) to make changes in specifications and materials, and (2) to change or discontinue models, both without notice or obligation. Dimensions are for reference only. See current full-line price book or www.specselect.com for finish options and product availability.

590TP Series
Electronic Faucet with Surface Mount Control Box

TECK® COMMERCIAL

DELTA

590TP0 & 590TP1 SERIES

- ❑ **590TP0** Hardwire
- ❑ **590TP1** Battery Operated

OPERATION:

- Hands free (touchless) operation.
- No visible sensor, the spout is the sensor.
- Water flows when sensing is activated.
- Water flow stops upon de-activiation of sensing.
- Adjustable sensing distance factory set to 76 mm (3").
- Low battery audible beep (for battery models only) will activate after faucet shuts off when approximately 1500 cycles remain.
- Adjustable auto shut off feature. Factory set to 45 seconds.
- Metering mode with selectable flow times of 7 seconds to 4 minutes, factory set off.
- Periodic Rinse feature, time adjustable in 6 hour increments up to 2 days. Selectable rinsing lengths from 10 to 180 seconds. Factory set off.

NOTE 1: For optimum performance of this product, we recommend a system pressure between 20 and 80 PSI static. This product will operate up to a maximum of 125 PSI static per ANSI and CSA requirements. However, we do not recommend pressures above 80 PSI. Thermal expansion or leaking pressure reducing valves may require use of expansion tanks or relief valves to ensure your system never exceeds its maximum intended pressure setting.

NOTE 2: Designed for routine 180°F (82°C) disinfection cycles up to 10 minutes.

NOTE 3: Use 3-conductor 18AWG wire between transformer and hardwire converter/driver board earth ground.

NOTE 4: Use Delta Commercial approved transformers and mount the transformer a minimum of 6 inches away from the Delta driver board enclosure.

NOTE 5: Refer to Proximity Application Notes for installation best practices, proper grounding and wiring diagrams on www.specselect.com.

590TP SERIES
ELECTRONIC DECK MOUNT LAVATORY FAUCET

ELECTRICAL SCHEMATICS

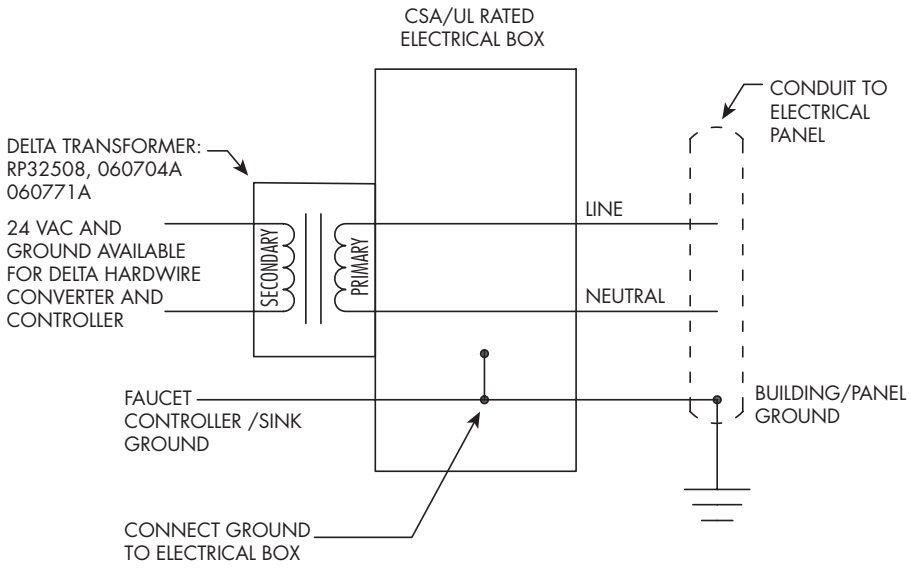

AVAILABLE OPTIONS FOR FIELD CONVERSION

❑ **061047A**
Hardwire with Battery Backup
See **DSP-BB** for detailed specification.

❑ **060651A**
3 Position Switch
See **DSP-ELACC** for detailed specification.

OPTIONAL ACCESSORIES	
✔	**TRANSFORMERS**
	060704A 110 to 24 VAC Class 2 20 VA (Up to 5 Electronic Valves)
	060771A 110 to 24 VAC Class 2 40 VA (Up to 10 Electronic Valves)
✔	**CORDS**
	061256A 36" Cable Extension

Note: Measurements may vary ± 6mm (0.25")

Delta reserves the right (1) to make changes in specifications and materials, and (2) to change or discontinue models, both without notice or obligation. Dimensions are for reference only. See current full-line price book or www.specselect.com for finish options and product availability.

590TP Series
Electronic Faucet with Surface Mount Control Box

TECK® COMMERCIAL

DELTA

SURFACE MOUNT CONTROL BOX #O

590TP SERIES

✔	PRODUCT NO.					VALVE TYPE	COVER
	590TP	0	1		0	Deckmount Handwash Hardwire	Surface Mount Control Housing
	590TP	1	1		0	Deckmount Handwash Battery	Surface Mount Control Housing

VANDAL RESISTANT SURFACE MOUNT CONTROL HOUSING

590TP SERIES

Battery Operated – Box shown.

Hardwire Version comes complete with Watertight Connector and Hardwire Converter 24 VAC to 6.4 VDC.

Hardwire with Battery Backup (Available option for field conversion) comes complete with Watertight Connector, Hardwire Converter 24 VAC to 5 VDC and 9 V battery. **See DSP-BB for detailed specification**.

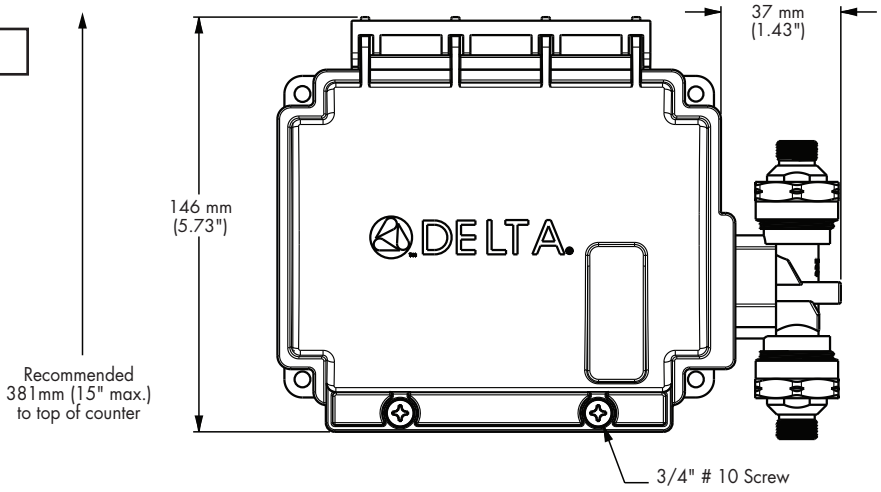

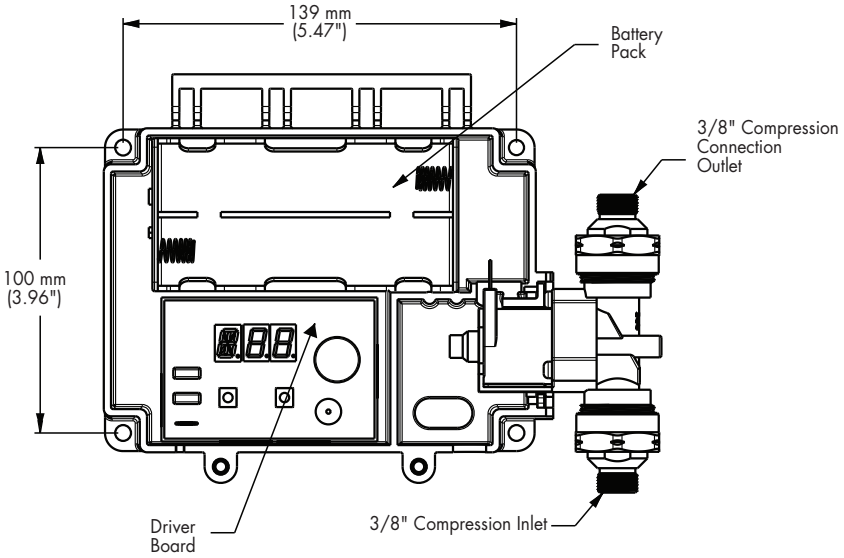

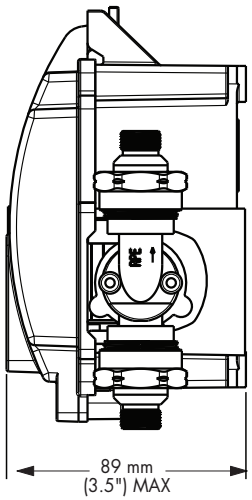

BRAIDED HOSE

Note: Braided polymer hose connections supplied between solenoid valve and spout as well as solenoid valve inlet.

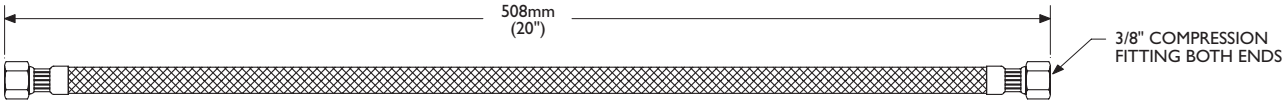

Note: Measurements may vary ± 6mm (0.25")

Note: Use all pages as product submittal sheets.

Delta reserves the right (1) to make changes in specifications and materials, and (2) to change or discontinue models, both without notice or obligation. Dimensions are for reference only. See current full-line price book or www.specselect.com for finish options and product availability.