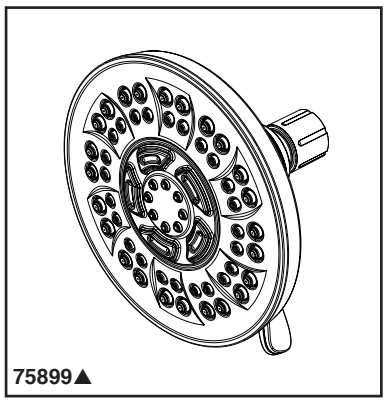

75899▲

see what Delta can do™

SHOWER HEAD

■ 8-Spray Setting Shower Head

FEATURES:

- Touch-Clean® Spray Holes

STANDARD SPECIFICATIONS:

- Max flow rate 1.75 gpm @ 80 psi, 6.6 L/min @ 550 kPa
- Hand shower with eight spray settings - pause is a non-positive shut-off
- Change spray settings with easy turn dial
- Ball connector swivel angle is 36˚ (18˚ per side)
- Fits standard 1/2"-14 NPT pipe fitting
- 8 Spray settings include: Full Body spray, Full Spray with Massage, Massaging spray, Shampoo Rinsing spray, Shampoo Rinsing spray with Massage, Soft Full spray, Shampoo with Full Spray, and Pause

WARRANTY:

- Parts and Finish – Lifetime limited warranty; or for commercial purchasers, 10 years for multi-family residential (apartments and condominiums) and 5 years for all other commercial uses, in each case from the date the product is received by the original purchaser or their authorized representative (installation contractor, etc.)..
- Please go to www.deltafaucet.com for the complete details of our limited warranty.

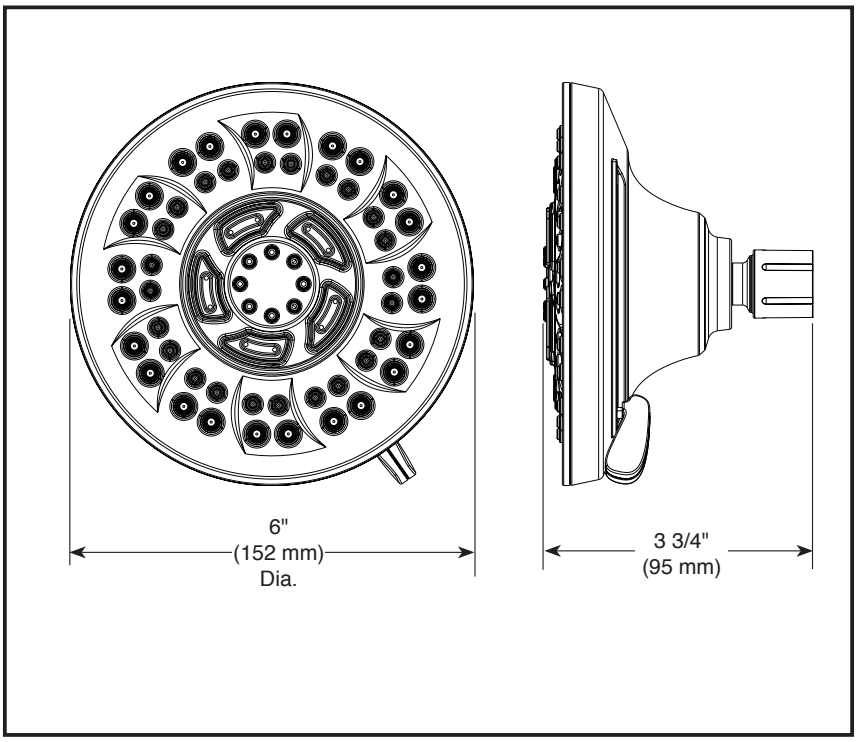

▲ Designate proper finish suffix

WaterSense
Meets EPA Criteria
Certified by CSA Group
SHOWER HEAD(S)
POMME(S) DE DOUCHE
CABEZA(S) DE REGADERA

COMPLIES WITH:

- ASME A112.18.1 / CSA B125.1
- EPA WaterSense®

Delta Faucet Company reserves the right (1) to make changes in specifications and materials, and (2) to change or discontinue models, both without notice or obligation. Dimensions are for reference only. See current full-line price book or www.deltafauet.com for finish options and product availability.

DSP-B-75899 Rev. B

Delta Faucet Company
55 E. 111th Street, Carmel, IN 46280
350 South Edgeware Road, St. Thomas, ON N5P 4L1
© 2025 Delta Faucet Company